HITACHI
Inspire the Next

Electronic Linear Probe
UST-5419
Instruction Manual

MN1-5793 Rev.5

Notes for operators and responsible maintenance personnel

★ *Please read through this Instruction Manual carefully prior to use.*

★ *Keep this Instruction Manual together with the ultrasound diagnostic instrument for any future reference.*

CE 0123

Hitachi, Ltd.

© Hitachi, Ltd. 2013, 2017. All rights reserved.

Introduction

This is an instruction for model UST-5419, an ultrasound probe.
Read the manual carefully before using the equipment. Take special note of the items in section 1 "Safety Precautions".
Keep this manual securely for future reference.

The CE mark on the probe indicates that this probe is valid when it is connected to ultrasound diagnostic instrument bearing the CE mark that is specified as available in section 2 of this document. Therefore, if a probe bearing the CE mark is connected to ultrasound diagnostic instrument that is specified as available but does not have a CE mark, part of this instruction manual may not apply.

Symbols used in this document

The terms below are used in the safety information provided to prevent hazards and injuries to the operator or patients. The severities of the hazard and injury that can occur when failing to observe the displayed safety information are indicated in four levels: "Danger", "Warning", "Caution" and "Note".

⚠ Danger
Indicates an imminently hazardous situation which, if not avoided, will result in death or serious injury to the operator or patient.

⚠ Warning
Indicates a potentially hazardous situation which, if not avoided, could result in death or serious injury to the operator or patient.

⚠ Caution
Indicates a potentially hazardous situation which, if not avoided, may result in minor or moderate injury to the operator or patient, or property damage only.

⚠ Note
Indicates a strong request concerning an item that must be observed in order to prevent damage or deterioration of the equipment and also to ensure that it is used efficiently.

The type of safety information is indicated by the symbols below.

⚠	This symbol means attention is required.
⃠	This symbol means that the described action is prohibited.
❗	This symbol means the described action is mandatory.

CONTENTS

1. Safety Precautions 1
1-1. Intended use 1
1-2. Usage precautions 1
1-2-1. Warnings and safety information 2
1-2-2. Cleaning, disinfection and sterilization precautions 4
1-2-3. Labels 5
2. Specifications and Parts name 9
2-1. Principles of operation 9
2-2. Specifications 10
2-3. Performance 11
2-4. Names of each parts 11
2-5. Environmental conditions 12
2-5-1. Operating environmental conditions 12
2-5-2. Storage environmental conditions 12
2-6. Classification of ME equipment 12
3. Preparations for Use 13
3-1. Start up check 13
3-1-1. Visual check 13
3-1-2. Verification of cleaning, disinfection and sterilization 13
3-1-3. Verification of operation 13
4. Usage 15
4-1. Operation 15
4-2. Connecting to the ultrasound diagnostic instrument 16
4-3. Removing from the ultrasound diagnostic instrument 17
4-4. Puncturing precautions 18
4-5. Actions to be taken when an abnormal state is detected 19
4-5-1. Ensuring safety of patients 19
4-5-2. Handling the utltrasound diagnostic instrument 19
5. Cleaning, disinfection and sterilization 21
5-1. Precautions for cleaning, disinfection and sterilization 22
5-2. Reprocessing instruction according to ISO 17664 23
5-3. Point of use (Pre-cleaning) 25
5-4. Containment and transportation 25
5-5. Manual cleaning and disinfection 26
5-5-1. Manual cleaning 26

5-5-2. Manual disinfection 27
5-5-3. Cable and connector 27
5-6. Automated cleaning and disinfecting 28
5-7. Applicable cleaners and disinfectants / Suppliers List 29
5-8. Drying.....31
5-9. Maintenance, inspection and testing 31
5-10. Packaging 31
5-11. Sterilization.....32
5-11-1. Ethylene oxide (EtO) gas sterilization.....32
5-11-2. STERRAD® sterilization 33
5-11-3. Liquid sterilization (USA only) 34
5-12. Storage.....34

6. Storage 35
6-1. Actions before storing the probe 35
6-2. Environmental conditions for storage 35

7. Moving and Transporting 37
7-1. Moving and transporting 37
7-2. Preparing the probe for moving.....37
7-3. Packing for transportation 37
7-4. Environmental conditions during transportation.....37

8. Periodic Inspection.....39
8-1. Safety tests of the probe 39
8-2. Testing of measurement tolerances 40
8-2-1. Conducting tests 40
8-2-2. Result judgment.....40

9. Configuration.....41
9-1. Standard configuration 41
9-2. Options 41

10. Disposal of the Device 43

This Instruction Manual contains the main body of 44 pages and 5pages until the CONTENTS.

1. Safety Precautions

1-1. Intended use

This probe is intended for use by a doctor or other qualified operator when placed into direct contact with the skin making ultrasonic observations of surrounding organs.

⚠ Caution
⃠ Do not use this equipment for other than its intended purpose. Use for other purposes can cause burns or other injuries to the patient or operator.

1-2. Usage precautions

The terms below are used in the safety information provided to prevent hazards and injuries to the operator or patients. The severities of the hazard and injury that can occur when failing to observe the displayed safety information are indicated in four levels: "Danger", "Warning", "Caution" and "Note".

⚠ Danger
Indicates an imminently hazardous situation which, if not avoided, will result in death or serious injury to the operator or patient.

⚠ Warning
Indicates a potentially hazardous situation which, if not avoided, could result in death or serious injury to the operator or patient.

⚠ Caution
Indicates a potentially hazardous situation which, if not avoided, may result in minor or moderate injury to the operator or patient, or property damage only.

⚠ Note
Indicates a strong request concerning an item that must be observed in order to prevent damage or deterioration of the equipment and also to ensure that it is used efficiently.

The type of safety information is indicated by the symbols below.

⚠	This symbol means attention is required.
⃠	This symbol means that the described action is prohibited.
❗	This symbol means the described action is mandatory.

1-2-1. Warnings and safety information

⚠ Warning	
❗	Follow the information in this manual and the documentation supplied with any equipment used together with this probe. Use that is not in accordance with the supplied documentation can result in a serious or moderate injury, equipment breakdown, or physical damage that impairs operation.
❗	Be sure to preparations for use. Use the probe without noticing an abnormal condition can result in injury to the operator or patient. If any abnormalities are noted on the probe in the start up check, immediately stop use the probe and contact one of our offices and/or distributor's offices listed on the back cover. See section 3. “Preparations for Use”.
❗	Clean, disinfect and sterilize before using the probe. Perform proper cleaning, disinfection and sterilization after use. Otherwise, there is a risk of infection. Note that the probe is not sterilized at the factory. Before using the probe first, be sure to clean, disinfect and sterilize it.
❗	Wear medical gloves during examination. Conducting examinations with the bare hands can expose the operator to a risk of infection.
❗	Dispose the probe used for patients with Creutzfeldt-Jakob disease. Otherwise, there is a risk of infection to the operator or patient. Our ultrasound probe is not compatible with any disinfection/sterilization method for Creutzfeldt-Jakob disease.
❗	When using ultrasonic contrast agent, follow the supplied documentation. Unexpected accidents could result. Check the state of the patient and take appropriate precautions to avoid side effects.
⊘	Do not use on the eyes. This equipment is not intended for use on the eyes. The acoustic output can have an adverse effect on the eyes.
⊘	Do not attempt to disassemble, modify, or repair the probe. Electric shock or other unforeseen accidents could result. Contact one of our offices and/or distributor's offices listed on the back cover to request repair.
⊘	Do not use the probe fallen on to floor. Otherwise, there is a risk of infection. Stop the operation and perform the procedure in section 8 "Periodic Inspection", section 5 "Cleaning, disinfection and sterilization" and section 3-1 "Start up check".

⚠ Caution	
❗	Constantly check for anything abnormal about the patient’s condition and the probe. Continued use without noticing that an abnormal condition has occurred can result in an electric shock and injury to the operator or patient. If an abnormal condition occurs, immediately move the probe away from the patient and stop use of the probe.
❗	The probe is vulnerable to damage by impact. Therefore, handle it with care. There is a risk of damage to the probe when the probe is fallen or hit somewhere.

⚠ Caution	
❗	Scan for the minimum length of time necessary for the diagnosis and at the lowest suitable output. Overuse can adversely affect the internal tissues of the patient. For details about the acoustic output, please refer to the documentation supplied with the ultrasound diagnostic instrument.
❗	Regularly perform maintenance of the equipment specified in this manual. Long-term use of the equipment, could reduce the performance, or cause smoke or fire. If finds any abnormal condition, immediately stop use the equipment and contact one of our offices and/or distributor's offices listed on the back cover.
❗	Use, move and transport the equipment under the environmental conditions specified in this manual. Otherwise, it may be damaged. See section 2-5 "Environmental conditions" and section 7-4 "Environmental conditions during transportation".
⃠	Do not use this equipment with other equipment except for those specifically approved in the manual. Use with unapproved equipment can result in an electric shock, burn, or other injury to the patient or operator and damage to this equipment and the other equipment.

1-2-2. Cleaning, disinfection and sterilization precautions

⚠ Warning	
❗	Wear protective gloves and other protective gear during cleaning, disinfection and sterilization. Handling of the probe with bare hands before disinfection or sterilization can result in an infection.
❗	After soaking in cleaning agents, thoroughly wash the probe with running water. Residual cleaning agents can cause an adverse reaction on the bodies of the operator or patient.
❗	After soaking in a disinfectant, throughly wash the equipment with deionized water. Leavings of the disinfectant can cause an adverse reaction on the bodies of the operator or patient.
❗	Perform aeration completely after gas sterilization. Residual gas can cause an adverse reaction on the bodies of the operator or patient.
❗	For details on the usage conditions of chemicals and sterilization procedures, refer to the documentation supplied with the respective chemical or sterilization equipment. Infection could result due to incomplete disinfection or sterilization. This could also cause deterioration of the probe.
⃠	Do not clean, disinfect or sterilize using procedures other than those specified in this manual. Infection could result due to incomplete cleaning, disinfection and sterilization. It can also result in damage to the probe or reduced performance. The probe cannot withstand autoclave sterilization or boiling and other types of sterilization at temperatures exceeding 55°C (140°F).

⚠ Caution	
⃠	Do not immerse the probe in any liquids beyond the range of IPX7 shown in section 2-2 "Specifications". Use when liquid has gotten inside the connector can result in a risk of electric shock to the operator or patient. If liquid gets inside the connector, immediately stop use and contact one of our offices and/ or distributor's offices listed on the back cover.

1-2-3. Labels

(1) Probe unit

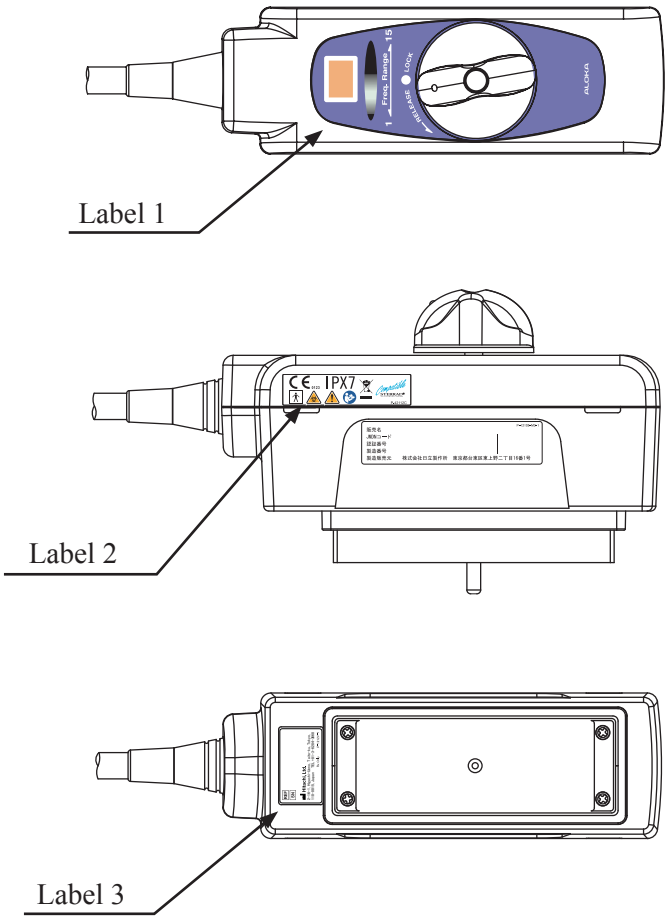

Label 1

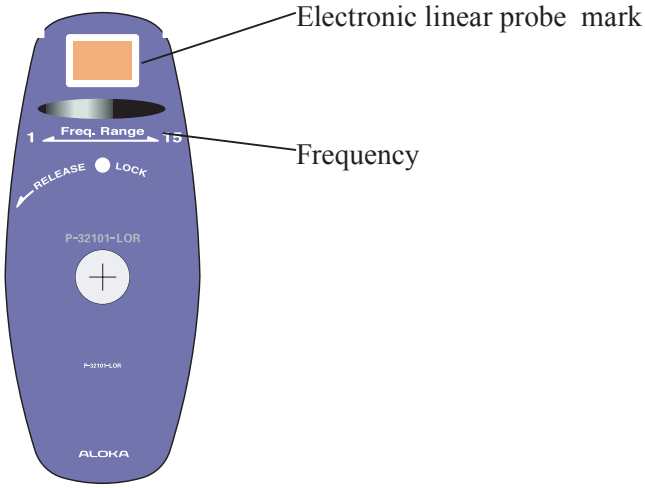

Label 2

This instrument complies with Directive 93/42/EEC relating to Medical Device and Directive 2011/65/EU relating to RoHS.

IPX7

IPX7 mark
See section 2-2, “Specifications”.

Type BF applied part

Do not waste the equipment as general waste.
Comply with a local regulation.
See section 10.

STERRAD sterilization compatibility mark
See section 5.

Safety warning sign

Biohazard
See section 5.

Follow the instruction manual to operate this equipment.
If not avoided, may result in injury, property damage, or the equipment trouble.

Label 3(Examples)

Model
Serial No.
Manufacturer
Address
Rx Only:
By prescription only. U.S. Federal Law restricts this device to sale on order of a physician only.

(2) Storage case

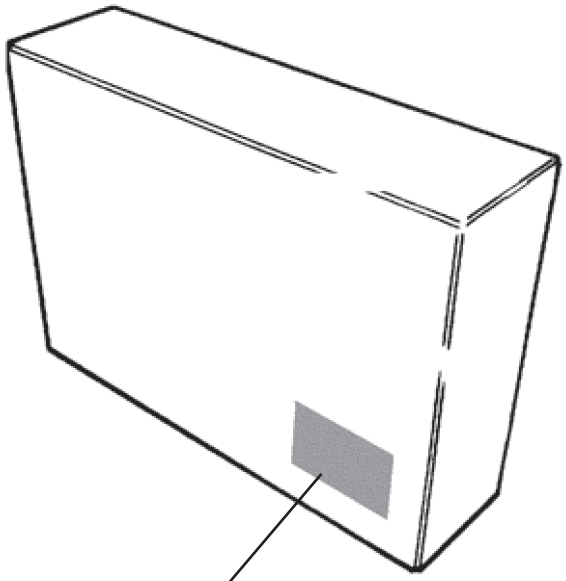

Label A

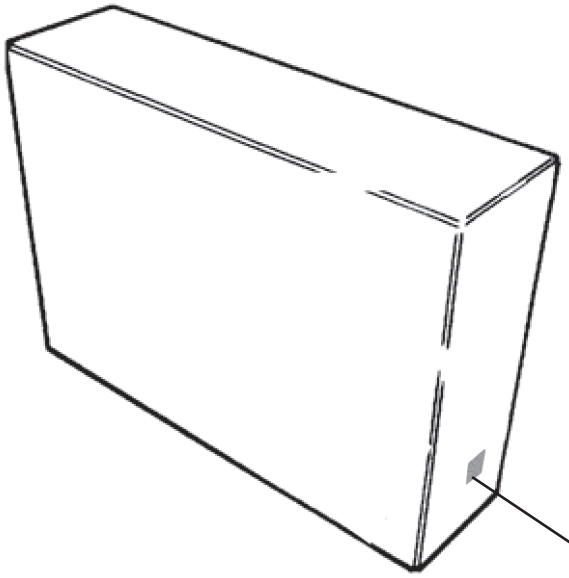

Label B

Label A

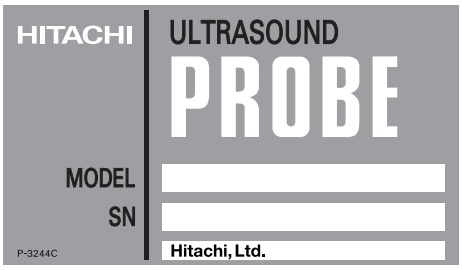

Model
Serial No.

Label B

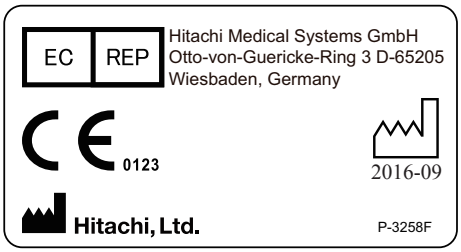

This instrument complies with Directive 93/42/EEC relating to Medical Device and Directive 2011/65/EU relating to RoHS.

2016-09

DATE OF MANUFACTURE
(in case of 2016-09)

MANUFACTURER

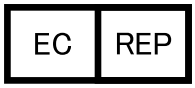

AUTHORISED REPRESENTATIVE IN EUROPEAN COMMUNITY

2. Specifications and Parts name

2-1. Principles of operation

This probe and the ultrasound diagnostic instrument enable image diagnosis using ultrasonic waves. These equipments operate under the principles described below.

(1) When an electric pulse signal is applied from the transmitter to the transducer of the probe, the transducer operates by converting electrical vibrations to mechanical vibration energy for emitting pulse-shaped ultrasonic waves into the body part contacting the transducer or into liquid or other medium.

(2) The emitted ultrasonic waves are reflected by boundaries with different acoustic characteristics (acoustic impedance) within the body.

(3) The transducer is also used to receive reflected ultrasonic waves. The transducer vibrates mechanically due to the received ultrasonic vibrations and uses an electro-mechanical conversion operation to convert the received mechanical vibrations to electric energy. The received echo is also converted to electric signals and a brightness modulation operation is used to convert the electric pulses to shades of brightness for forming an image.

2-2. Specifications

Application regions:	Deep vein, Abdomen, Liver, Alimentary canal
Form of application to patient:	Surface
Connectable instruments:	ProSound F75
Field of view:	38mm
Frequency:	3 to 7 MHz
Cable length:	2.0 m
Weight:	950 g
Service life:	Three years
Range of applied part:	Ultrasonic irradiation area, see the section 2-4.
Parts treated as applied parts:	Probe tip itself and 1 m of the cable near the probe tip.
IPX7 range:	As shown in the figure below.
External dimensions:	As shown in the figure below.

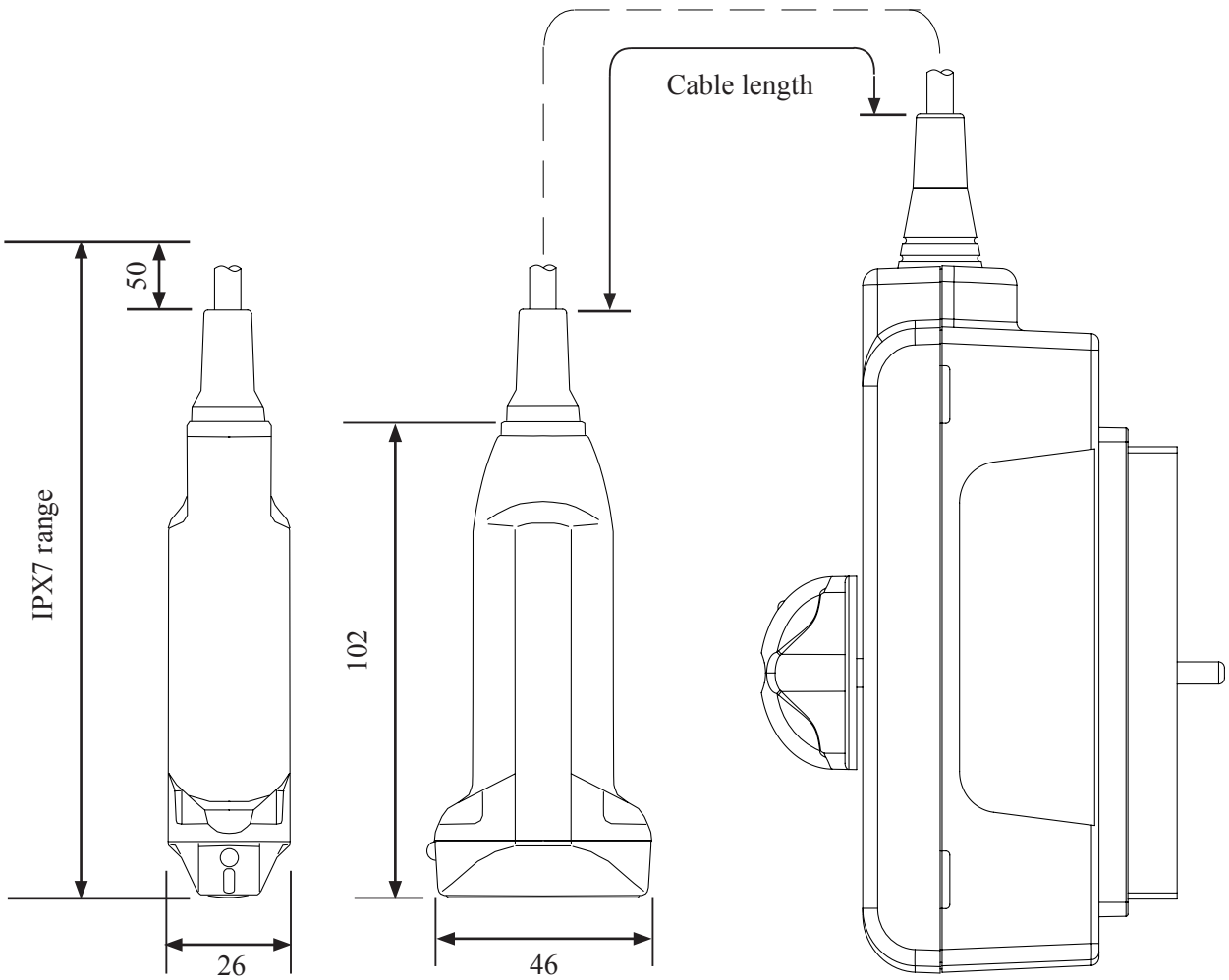

Unit : mm

Remarks
The dimensions and weight are within ±10% of the indicated values.

2-3. Performance

For measurement tolerances, operating tolerances and other data, refer to the instruction manual for the ultrasound diagnostic instrument.

2-4. Names of each parts

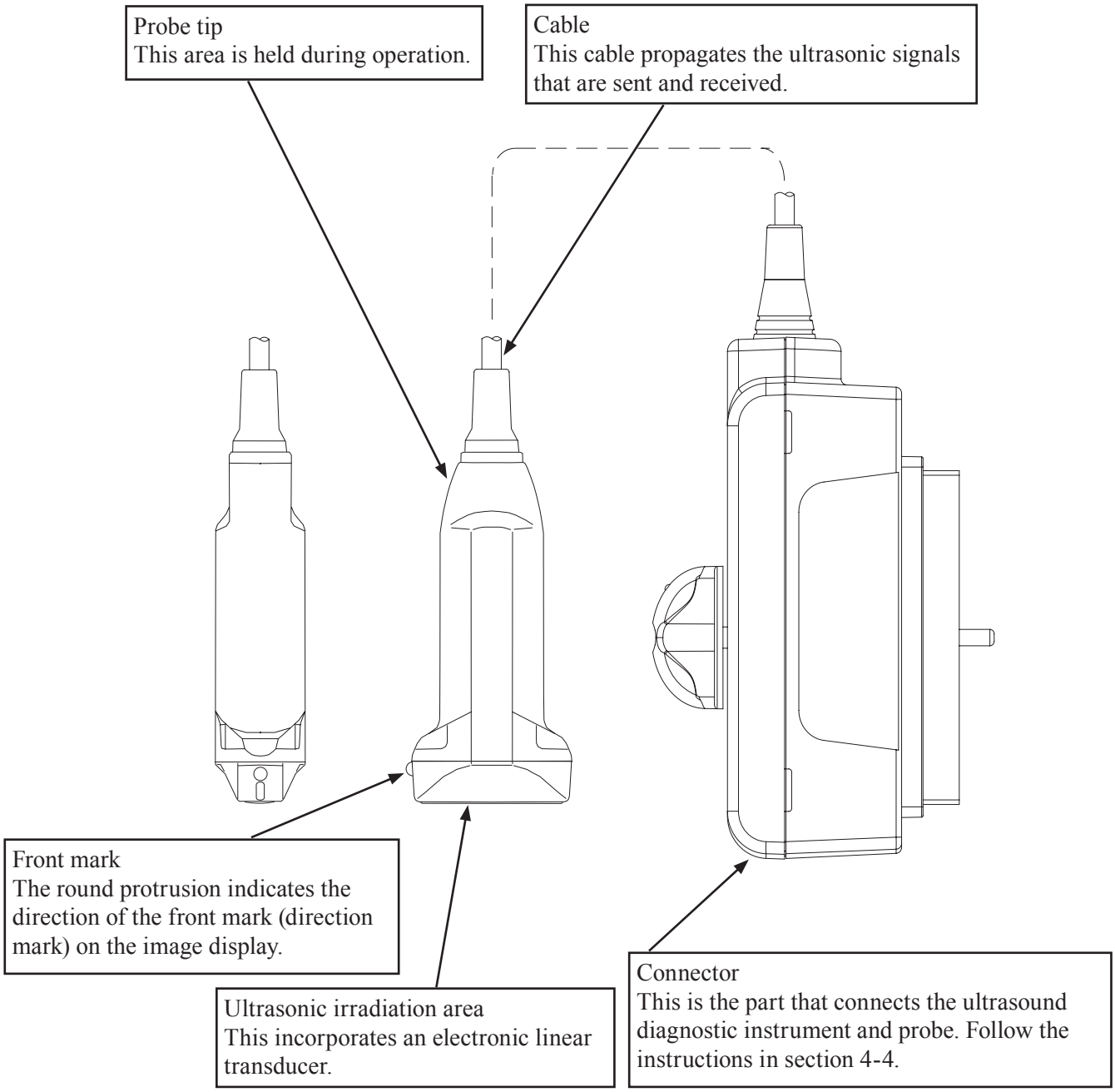

⚠ Caution	
⊘	Do not pull, bend, twist, or apply excessive force to the cable. The conductors may break and the cable may become unusable.
⊘	Do not subject the ultrasonic irradiation area to hard impact. The impact may cause damage to the transducer, and that results in noise or no echo in the image. In most cases, the ultrasonic irradiation area itself is not damaged because the part is made of elastic material.

2-5. Environmental conditions

Use and store the equipment under the following conditions.

2-5-1. Operating environmental conditions

Ambient temperature:	10°C to 40°C 50°F to 104°F
Relative humidity:	30% to 75%
Atmospheric pressure:	700 hPa to 1060 hPa
Altitude:	3,000 m or less

2-5-2. Storage environmental conditions

Ambient temperature:	–10°C to 50°C 14°F to 122°F
Relative humidity:	10% to 90%
Atmospheric pressure:	700 hPa to 1060 hPa

⚠ Caution

Avoid operating or storing the equipment in the following locations.
- Locations exposed to water or other liquids
- Locations subject to adverse conditions such as air pressure, temperature, humidity, ventilation, direct sunlight, dust, or air containing salt, sulfur, or other corrosive substances
- Locations where chemical substances are stored or where gases are generated

Storage in these locations can result in a breakdown or reduced performance.

Avoid rapid temperature change which may cause condensation. Avoid using in locations where condensation or water droplets can form.
Condensation can occur when moving the equipment from a cool location to a warm one. Use when condensation has occurred can result in a breakdown or reduced performance.

2-6. Classification of ME equipment

- Classification based on degree of protection against electric shock . Type BF applied Part
- Classification for protection against ingress of liquids ..... IPX7 (Watertight equipment)
- Operation mode ..... Continuous operation
- Method of sterilization ..... See section 5 “Cleaning, disinfection and sterilization”

For the range of applied parts, parts treated as applied parts and the range of IPX7, see section 2-2.

3. Preparations for Use

3-1. Start up check

3-1-1. Visual check

Visually check the probe tip, ultrasonic irradiation area, cable and connector.
If any holes, indentations, abrasion, cracks, deformation, looseness, discoloration, or other abnormalities are found, do not use the equipment.

3-1-2. Verification of cleaning, disinfection and sterilization

Verify that cleaning, disinfection and sterilization are conducted according to the intended use.

3-1-3. Verification of operation

Connect to the ultrasound diagnostic instrument by following the instructions in section 4-4 “Connecting to the ultrasound diagnostic instrument" and check that the selected probe match the linear display and the displayed frequency and check the image for errors.

Remarks
For details on the displayed screens, see the documentation supplied with the ultrasound diagnostic instrument.
If the probe is operated in still air, brightness on the top of the image may be non uniform, but this does not affect the performance of the probe.

⚠ Warning

Be sure to preparations for use.
Using the probe without noticing an abnormal condition can result in injury to the operator or patient.
If an inspection finds an abnormal condition in the probe, immediately stop use and contact one of our offices and/or distributor's offices listed on the back cover.

⚠ Caution

Do not use the probe, if displayed image shape or frequency is not match with selected probe.
An incorrect acoustic output can result in burns or other injuries to the patient. Contact one of our offices and/or distributor's offices listed on the back cover.

4. Usage

4-1. Operation

Bring the ultrasonic irradiation area of the probe into contact with the skin surface. An image of the region of interest is displayed on the monitor of the ultrasound diagnostic instrument. For details on displaying and adjusting the screens, see the documentation supplied with the ultrasound diagnostic instrument.

⚠ Caution	
❗	Scan for the minimum length of time necessary for the diagnosis and at the lowest suitable output. There is the possibility that the patient's internal tissues could be affected. For details about the acoustic output, please refer to the documentation supplied with the ultrasound diagnostic instrument.
⃠	Do not move the probe with excessive force. Pressing with more force than necessary can cause injury to the patient.
⃠	Do not touch the connector terminal pin of the probe. The probe may deteriorate or be damaged due to electrostatic discharge.
⃠	Do not touch the electronic probe connecting socket of the diagnostic instrument and the patient at the same time. It can cause electric shock to the patient.

4-2. Connecting to the ultrasound diagnostic instrument

The lock lever of the connector moves over the range shown in the figure at right.
Align the ○ mark with the LOCK or RELEASE position and lock or release the electronic probe connecting socket of the diagnostic instrument (probe connector).
Connect the probe to the probe connector by following the procedure below.

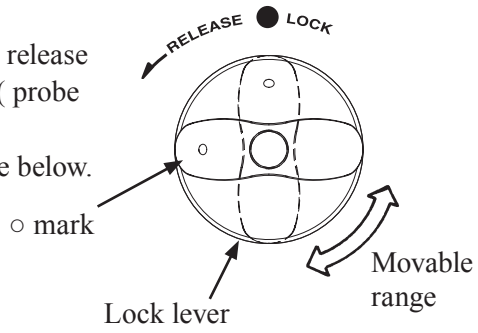

- Connection procedure

The probe is connected when in one of the following states.
- The power switch is set to OFF.
- The image displayed on the ultrasound diagnostic instrument is frozen.

Before inserting the probe into the probe connector, check that the connector pins are not bent.

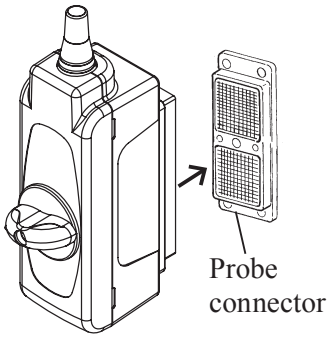

1. Turn the connector lock lever to align the ○ mark on the lever with the RELEASE position.

2. Firmly insert the connector into the probe connector.

3. Turn the lock lever clockwise by 1/4 turn until the ○ mark is aligned with the LOCK position.

4. Check that the connector is firmly inserted into the probe connector.

   This completes connection of the probe.

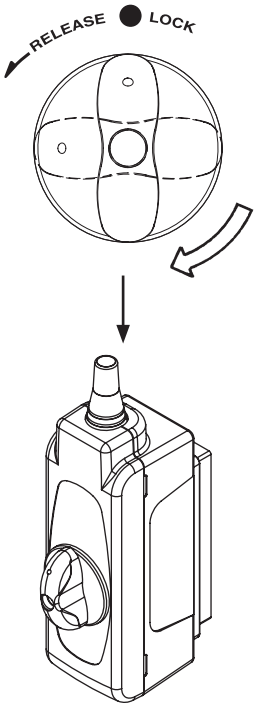

⚠ Caution

If there is resistance when trying to turn the lock lever when connecting the connector, do not forcibly try to connect it. Instead, correctly perform the steps for connecting the connector and firmly insert it into the probe connector.
Forcibly turning the lever may damage the connector and the probe connector.

4-3. Removing from the ultrasound diagnostic instrument

The lock lever of the connector moves over the range shown in the figure at right.
Align the ○ mark with the LOCK or RELEASE position and lock or release the probe connector.
Use the procedure below to remove the probe from the probe connector.

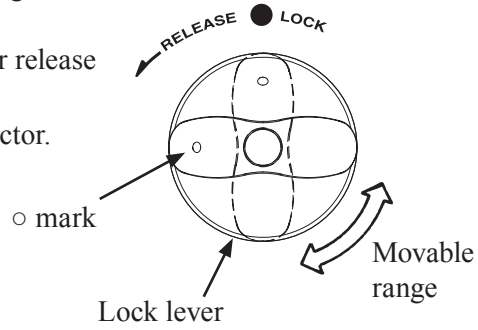

- Removal procedure

The probe is removed when in one of the following states.
- The power switch is set to OFF.
- The image displayed on the ultrasound diagnostic instrument is frozen.

1. Turn the connector lock lever to align the ○ mark on the lever with the RELEASE position.

2. Firmly grasp the connector unit and pull it out from the probe connector.

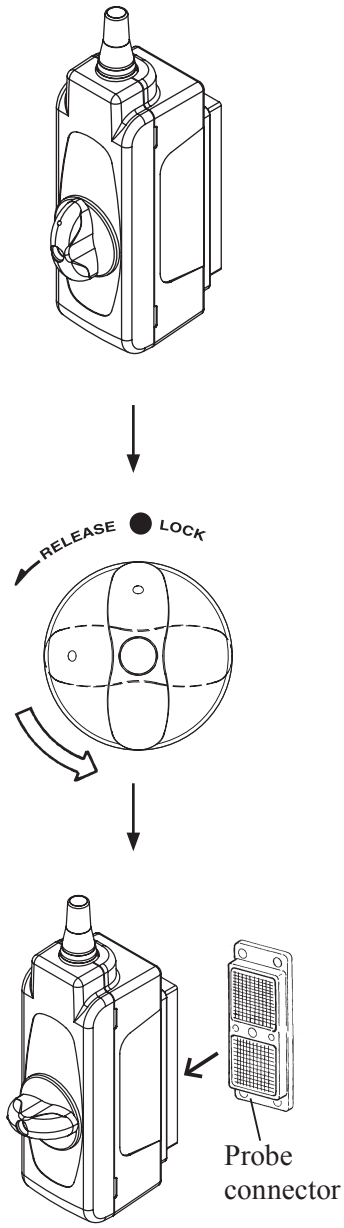

This completes the removal of the probe.
After use, perform cleaning, disinfection and sterilization of the probe by following the procedure in section 5 “Cleaning, disinfection and sterilization".
If the probe will not be used for an extended period of time, store it by following the instructions in section 6 “Storage".

4-4. Puncturing precautions

⚠ Warning	
❗	Carefully read the usage precautions in the documentation supplied with the coupler attachment. Be sure that the preparations for use are completed before using.
❗	Puncturing must be performed by a skilled doctor. Improper puncturing can injure the patient. Puncturing operations must be performed by a doctor who fully understands the characteristics of ultrasonic diagnostics and who is skilled and has a thorough knowledge of puncture operations under an ultrasonic guide.
❗	The coupler attachment must be properly mounted on the probe during use. Puncturing with the coupler attachment improperly mounted or the coupler attachment uninstalled can result in the coupler attachment coming off during puncturing or puncturing of an unintended body part, causing injury to the patient. For details about the coupler attachment mounting procedure, see the documentation supplied with the coupler attachment.
❗	Equipment that come into contact with a patient during puncturing must be sterilized. Use of unsterilized items can cause an infection. For details concerning the equipment sterilization procedure, see the documentation supplied with the equipment.
❗	For the acoustic medium, use sterilized acoustic medium. Using an acoustic medium can cause an infection on the patient.
❗	Use a compatible puncture needle size. Use of a puncture needle that is not a compatible size can result in puncturing of an unintended body part, causing injury to the patient. For the compatible puncture needle sizes, see the documentation supplied with the coupler attachment.
❗	During the puncture operation, display a suitable puncture guide line on the screen of the ultrasound diagnostic instrument. Puncturing of an unintended body part can cause injury to the patient. Display the puncture guide line on the screen referring to the documentation supplied with the ultrasound diagnostic instrument, to use it as an aid in determining the puncturing direction.
❗	Constantly check the safety in the needle insertion direction using the needle echo rendered by the ultrasonic wave. A bent puncture needle can result in puncturing of an unintended body part and cause injury to the patient.
❗	Check that no other organs lie in the puncture path. If another organ lies in the puncture path, an unintended body part can be punctured and cause injury to the patient. Before puncturing, carefully check the body parts and constantly confirm the needle echo during the operation.
❗	Before using a needle cannula with the coupler attachment as a guide, first check that the cannula moves smoothly through the coupler attachment without causing any damage on the surface of the cannula and then operate with caution. If the cannula does not move smoothly or is forced to bend when inserted in or pulled out of the coupler attachment, it may damage the insulation membrane covering the cannula and may cause burns to the tissue exposed to the damaged area of the cannula.
❗	When puncturing, be sure to wear sterilized medical gloves. Puncturing with the bare hands can expose the operator or patient to a risk of infection.
❗	For details about the reuse and disposal of puncturing needles, follow the instructions in the documentation supplied with the puncturing needles. Reuse of puncturing needles that are not reusable or improper disposal could result in an infection.

⚠ Warning	
❗	Check beforehand any areas not displayed on the ultrasound image that are along the puncturing path. If other tissues are in the area not displayed on the ultrasound image, there is a risk of puncturing an unintended body part and causing an injury to the patient.
❗	When performing puncturing, use a coupler attachment that is described in the documentation. Puncturing with the coupler attachment uninstalled can result in puncturing of an unintended body part, causing injury to the patient.
⃠	Do not use needles were bent. Puncturing of an unintended body part can cause injury to the patient.
⃠	Do not try to forcibly perform operations. If excessive force is applied in a direction other than the insertion direction of the puncture needle, the puncture needle can come off the guide line, resulting in puncturing of an unintended body part, causing injury to the patient.
⃠	Do not puncture the heart region. Puncturing the heart region may cause a micro electric shock.

⚠ Caution	
❗	Handle the needle carefully to ensure that the probe or coupler attachment is not damaged. Using a probe or coupler attachment that has been damaged by a needle can result in an injury to the operator or patient.
❗	Constantly check for anything abnormal with the patient's condition, the probe and coupler attachment. Continued use without noticing that an abnormal condition has occurred can result in an injury to the operator or patient. If an abnormal condition occurs, immediately move the probe away from the patient and stop use of the probe.
❗	Check beforehand if the patient has any allergic reactions to metals. If the patient has a metal allergy of stainless steel, puncture adapter may be hazardous for patient as an allergic risk.

4-5. Actions to be taken when an abnormal state is detected

4-5-1. Ensuring safety of patients

Immediately move the probe away from the patient and quit operation.
Keep the patient in safe condition and administer the required medical treatment.

4-5-2. Handling the utltrasound diagnostic instrument

Turn off the ultrasound diagnostic instrument, remove its plug from the AC socket and sterilize if it is contaminated. For details, refer to the instruction manual for the ultrasound diagnostic instrument.

⚠ Caution	
⃠	Do not use the probe where a problem has been found. If used the probe in an abnormal condition, there is injury to the patient. Contact one of our offices and/or distributor's offices listed on the back cover.

5. Cleaning, disinfection and sterilization

Applicable cleaning, disinfection and sterilization methods for each product are listed in the Table 1. The detail of each method is described in Chapter 5-2.

Table 1 Applicable cleaning, disinfection and sterilization methods

Model	Cleaning		Disinfection		Sterilization					Waterproof cover (MP-2790)
	Manual	Automated *1	Manual	Automated *1	EtO	STERRAD®	Liquid *2	Autoclave	STERIS®	
UST-5419	X		X		X	X	X			

Note: X means “Applicable”

*1: Automated Need waterproof cover

*2: Liquid sterilization USA only

5-1. Precautions for cleaning, disinfection and sterilization

The following warnings and cautions must be observed when cleaning, disinfecting and sterilizing the probe and accessories.

⚠ Warning	
❗	Wear protective gloves and other protective gear during cleaning, disinfection and sterilization. Handling of the probe with your bare hands before sterilization can result in an infection.
❗	After finishing soaking the probe in cleaning agents, thoroughly wash it with running water. Residual cleaning agents can cause an adverse reaction to the operator or the patient.
❗	After chemical sterilization, thoroughly wash the probe with sterile water. Residual chemicals can cause an adverse reaction to the operator or patient. (USA only)
❗	After disinfecting the probe, throughly wash the probe with deionized water. Leavings of the disinfectant can cause an adverse reaction on the bodies of the operator or patient. (EU only)
❗	Perform full aeration after gas sterilization. Residual gas can cause an adverse reaction to the operator or patient.
⃠	Do not clean or sterilize using procedures other than those specified in this manual. Failure to clean and sterilize the equipment can result in an infection. It can also result in damage to the probe or reduced performance. The probe is not compatible with autoclave sterilization or boiling and other types of sterilization at temperatures exceeding 60°C [140°F].
❗	For details on the usage conditions of chemicals and sterilization procedures, refer to the documentation supplied with the respective chemical or sterilization equipment. Infection can be resulted due to incomplete sterilization. Wrong sterilization procedure could cause deterioration of the probe.

⚠ Caution	
⃠	Do not immerse the probe into any liquid beyond the range of IPX7. The range is indicated in the section 2-2 "specification". If any liquid enters the connector, immediately stop using the probe and contact one of our offices and/or distributor's offices listed on the back cover. Liquid in the connector could cause electric shock to the operator or patient.
⃠	Do not wipe the ultrasonic radiation part with alcohol. Alcohol could damage the part.
⃠	Do not use organic solvent such as thinner for cleaning to prevent the probe from damage.
⃠	Do not use hard or sharp objects to remove residue on the probe. Such objects may damage the probe.

Additional information:
The Instructions provided above have been validated by the medical device manufacturer as being CAPABLE of preparing a medical device for re-use. It remains the responsibility of the processor to ensure that the processing as actually performed using equipment, material and personnel in the processing facility achieve the desired result. This requires validation and routine monitoring of the process. Likewise any deviation by the processor from the instructions provided should be properly evaluated for effectiveness and potential adverse consequences.

5-2. Reprocessing instruction according to ISO 17664

Take care about clean circumstances before using the probe on the next patients. If processors reprocess this equipment, refer to these instructions.

Table 1

WARNINGS	• The probe is delivered unsterile. Prior to the first use, reprocess the probe. • Do not exceed 60 °C [140 °F]. • Probe connector has no water resistance.
Limitations on reprocessing	The probe is not completely submergible (Do not immerse the probe into any liquid beyond the range of IPX7. The range is indicated in the section 2-2 "specification".) Parts which are not submergible can only be disinfected by wipe disinfection.
Transportation before using	Sterile pouch or container should be kept between transportation from Central Sterile Supply Department (CSSD) to operating room. Be careful that no damages are applied to sterile pouch or container for transportation.

The level of processing required depends on the type of equipment and its use.
The CDC (Centers for Disease Control and Prevention) in the USA and the RKI (Robert Koch Institute) in Germany classify medical devices according to their use. For each classification, they specify the level of disinfection/sterilization processing that is required before use. Table 3 summarizes this information.

Table 2

Classification	**Definition**	**Processing**
Noncritical	Application part only contacts intact and uninjured skin	Cleaning ↓ Disinfection [in the USA, low-level disinfection]
Semicritical	Application part contacts mucosa (intracavitary application)	Cleaning ↓ Disinfection (Disinfectant with bactericidal, fungicidal and virucidal effect) [in the USA, high-level disinfection or sterilization]
Critical	Application part contacts intracorporeal tissue directly (intraoperative application)	Cleaning ↓ Disinfection ↓ Sterilization *1

*1. When sterilization is not possible, the FDA in the USA recognize that disinfection (in the USA, high-level disinfection) and the use of a sterile gel and sterile transducer cover, as described in the instructions provided with the transducer cover, is an accepted method of infection control for probe.

Flowchart of reprocessing process of this probe is as follows:

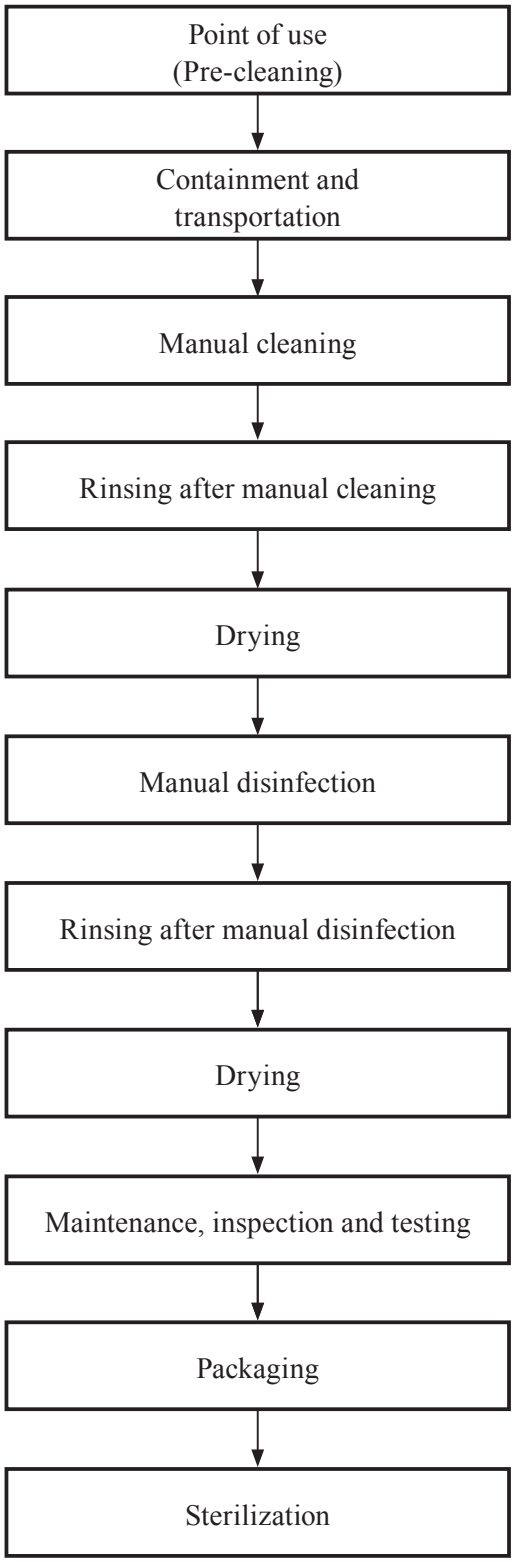

5-3. Point of use (Pre-cleaning)

In the operating room after use of the probe

Probe

1) Remove any accessories from the probe like biopsy adapters.
2) Flush patient's blood or fluid by tap water directly after use until the surface looks visually clean.
3) Wipe the whole surface of the probe by gauze pad and remove superficial visible impurities until the surface looks visually clean.

5-4. Containment and transportation

Putting the contaminated equipment into exclusive shock and damage proof container for transportation is recommended. It is recommended that instruments are reprocessed as soon as possible and not later than 4 hours after usage.

⚠ Caution

Do not immerse the probe in any liquids beyond the range of IPX7 shown in section 2-2 "Specifications". Use when liquid has gotten inside the connector can result in a risk of electric shock to the operator or patient. If liquid gets inside the connector, immediately stop use and contact one of our offices and/or distributor's offices listed on the back cover.

5-5. Manual cleaning and disinfection

Prepare following items before manual cleaning and disinfection.

Probe

1) Detergent: ENZOL®/Cidezyme® (Johnson & Johnson, #2258) or another cleaning agent with approved material compatibility for this medical device.
2) Disinfectant: Cidex® OPA (Johnson & Johnson, # 20391) or another disinfectant with approved material compatibility for this medical device.
3) 2 tanks, 1 for cleaning and 1 for disinfection - optional: 1 additional tank for rinsing with deionized/ tap water. (sufficient size for immersion of the submergible part of the probe at full length)
4) Soft, fluff free cloth or single use towel
5) Personal protective equipment (gloves, water repellent protective skirt, face protection mask or protective glasses see also instructions of the manufacturer for the detergent and the disinfectant)

5-5-1. Manual cleaning

Probe

1) The temperature of the detergent solution should be between 15-30 °C [59-86 °F], concentration is 1.6%. Please note the minimum contact time of the detergent in the manufacturer's instruction. If a differing detergent is used, please also consider the approved material compatibility for this probe.
2) Immerge the submergible part of the probe (see figure) without connector into the detergent.
3) Wipe the submergible part of the probe under the surface of the detergent solution with a single-use, fluff free soft cloth to remove all visible soil. Be sure that all grooves of the probe are implemented during the cleaning process. If necessary use an appropriate cleaning brush for this purpose.
4) Wipe the non-submergible parts of the probe with a soft cloth dipped with a detergent.
5) Rinse the submergible part of the probe with running tap water for 1 minute.
6) Alternatively to step 5 suspend the submergible part of the probe in a tray filled with deionized water/tap water for 5 min.
7) Visually check the outer surface of the probe for cleanness. If necessary, use magnifying glass for visually check. If there is still soil visible, repeat all above steps.

5-5-2. Manual disinfection

Probe

1) Before immersing the equipment, it is recommended to test the concentration of disinfectant solution before each usage. The solution Cidex® OPA is ready for use and does not need to be diluted. Test strips to verify that the appropriate concentration of Cidex® OPA is correct are available by manufacturer. Test strips will indicate a concentration above the Minimum Effective Concentration (MEC). Temperature of disinfectant solution should be minimum 20 °C[68 °F]. The minimum contact time is 5 minutes. If a differing disinfectant is used follow the manufacturer's instructions. Please also consider the material compatibility for the medical device.
2) Wipe the non-submergible parts of the probe with a soft and fluff free cloth with disinfectant.
3) Immerge the submergible part of the probe (see figure) into the disinfectant. Set a clock to insure the recommended contact time is observed.
4) Rinse the submergible part of the probe with running deionized water for 1 minute.
5) Alternatively to step 4 suspend the submergible part of the probe in a tray filled with deionized water for 5 min.
6) Visually check the outer surface of the probe for that there are no leavings of the disinfectant. If necessary, repeat the rinsing.

⚠ Caution

Do not wipe the ultrasonic radiation part with alcohol.
Alcohol could damage the part.

⚠ Warning

After finishing soaking the probe in the cleaning agent or disinfectant, thoroughly rinse it with running water (after cleaning) and deionized water (after disinfection). Residual agent can cause an adverse reaction to the operator or patient.

5-5-3. Cable and connector

Wipe the cable in 20 cm intervals with gauze dipped in ethyl alcohol or water, and dry it after wiping.
Clean the connector with gauze dipped in ethyl alcohol, and dry it after cleaning.
Clean the other parts of the probe which must not be soaked in liquid in the same manner as the connector.

⚠ Note

If the entire length of the cable is wiped at once, a part of the cable may be wrinkled.
If this occurs, pull the wrinkled part in the opposite direction to smooth it.

5-6. Automated cleaning and disinfecting

Probe

⚠ Warning
⃠ The probe cannot withstand Automated cleaning and disinfecting.

5-7. Applicable cleaners and disinfectants / Suppliers List

The applicable chemical solutions are listed below.

General name	Trade name	Manufacturer
Enzyme cleaning agent	ENZOL®/Cidezyme® Practical liquid 0.8V/V%	ADVANCED STERILIZATION PRODUCTS® A Johnson & Johnson company Division of Ethicon, Inc.
Alkylpolyalkylenglykolether	Korsolex® Endo-Cleaner	BODE Chemie GmbH

General name	Trade name	Manufacturer
Glutaral	CIDEX® Solution 2.4%	ADVANCED STERILIZATION PRODUCTS® A Johnson & Johnson company Division of Ethicon, Inc.
Ortho-phthalaldehyde	CIDEX® OPA Solution 0.55%	
Glutaral	Cidex plus®	
Glutaral	STERIHYDE® * Practical liquid 2W/V%	Maruishi Pharmaceutical Co., Ltd.
Hydrogen peroxide	ANIOXYDE 1000 * Solution 0.15%	Laboratories ANIOS
Glutaral	Korsolex Endo- Disinfectant	BODE Chemie GmbH

Note: * indicates that the marked disinfectant is not applicable in Canada.

High-level disinfection

General name	Trade name	Manufacturer
Glutaraldehyde	STERANIOS * Solution 2.0%	Laboratoires ANIOS
Glutaral	Cidex plus® Solution 3.4%	ADVANCED STERILIZATION PRODUCTS® A Johnson & Johnson company Division of Ethicon, Inc.

Note: * indicates that the marked disinfectant is not applicable in Canada.

⚠ Warning

After disinfection, thoroughly rinse the probe with deionized water.
Residual disinfectant can cause an adverse reaction to the operator or patient.

5-8. Drying

Probe

1) Wipe the probe with single use, fluff free wipe or towel for removing moisture on the surface of the equipment.
2) If using drying heater for medical equipment, the temperature limit is a maximum of 60 °C [140 °F]. Dry until no visible moisture is left.
3) If using natural drying, temperature range should be between 15-30°C[59-86°F] for a minimum time of 4 hours.

5-9. Maintenance, inspection and testing

Confirm following items

1) the function of mechanical moving parts
2) the image performance when the probe is connected to the scanner
3) there are no abnormal exterior damages such as cracks on the surface of the equipment
4) Safety tests (See section 8-1)

5-10. Packaging

Store the disinfected probe in a dustproof environment until next application. Before sterilization it is necessary to pack all parts in a pouch suitable for sterilization, or in a tray with wrap according to ISO 11607-1 and ISO 11607-2 “Packaging for terminally sterilized devices” and ISO/TS 16775 “Packaging for terminally sterilized medical devices - Guidance on the application of ISO 11607-1 and ISO 11607-2” or the local hospital procedure. Follow the pouch manufacturer’s specifications or the local regulations for how to pack and seal the pouches. Check the sealing seam after heat sealing for any defects. In case of processing mistakes or defects the package has to be opened again and the device has to be packed and sealed again.

5-11. Sterilization

See “Table 1. Applicable cleaning, disinfection and sterilization methods” for available sterilization methods Follow the instructions of the sterilizer manufacturer regarding usage, temperature and sterilization-time etc. Handling and maximum input to chamber of sterilizer should be according to operation manual of the sterilizer.

5-11-1. Ethylene oxide (EtO) gas sterilization

Sterile conditions of applicable sterilization methods are as follows.

Regarding the operation of the sterilizer, refer to the documentation supplied with the sterilizer.

Perform sterilization in the following conditions:	
Gas Type:	10% EO/ 90% HCFC
Temperature:	50 - 60°C
	122 - 140°F
Exposure Time:	More than 120 minutes
Pressurization:	162 - 200kPa
Depressurization:	13 - 8kPa
Relative humidity:	40 - 90%
Aeration is minimum	12 hours

⚠ Warning

Perform full aeration after gas sterilization.
Residual gas can cause an adverse reaction to the operator or patient.

5-11-2. STERRAD® sterilization

Sterile conditions of applicable sterilization methods are as follows.
The applicable gas is listed below.

General name	Trade name	Manufacturer
Hydrogen peroxide (58% density)	STERRAD® Sterilization system (STERRAD® 50, 100S, 200, NX or 100NX)	ADVANCED STERILIZATION PRODUCTS® A Johnson & Johnson company Division of Ethicon, Inc.

Regarding the operation of the sterilizer, refer to the documentation supplied with the sterilizer.

Remark:
Some discoloration of the probe may occur, but this does not affect performance or safety.

⚠ Caution

Do not sterilize the probe using the STERRAD system if the probe is not compatible with the STERRAD system. STERRAD compatibility is shown by the STERRAD label on the connector.
Perform STERRAD sterilization only for STERRAD compatible probes, otherwise it can cause damage or deterioration to the probe.

* STERRAD label

Do not put the probe directly into the sterilization pouch*.
Otherwise the pouch sticks to the cable and results in damage to the cable. Completely wrap the entire probe (including the probe tip, cable and connector) with sterilization wraps* before putting it into the sterilization pouch*.
*: A Johnson & Johnson company Division of Ethicon, Inc. product

5-11-3. Liquid sterilization (USA only)

• Applicable chemical solution for sterilization
The applicable sterilants are listed below.

General name	Trade name	Manufacturer
Glutaraldehyde	STERANIOS * Solution 2.0%	Laboratoires ANIOS
Glutaral	Cidex plus® Solution 3.4%	ADVANCED STERILIZATION PRODUCTS® A Johnson & Johnson company Division of Ethicon, Inc.

Note: * indicates that the marked sterilant is not applicable in Canada.

⚠ Warning

After chemical sterilization, thoroughly rinse the probe with sterile water.
Residual sterilant can cause an adverse reaction to the operator or patient.

5-12. Storage

For details about the storage environmental conditions, see section 2-5-2 “Storage environmental conditions”.

6. Storage

6-1. Actions before storing the probe

When the probe will not be used for an extended period, perform the procedures described in section 5 “Cleaning, disinfection and sterilization" and then store it in its storage case.

6-2. Environmental conditions for storage

For details about the storage environmental conditions, see section 2-5-2 “Storage environmental conditions".

7. Moving and Transporting

7-1. Moving and transporting

In this section, *moving* refers to "carrying of the equipment within a facility" and *transporting* refers to "transferring using a vehicle or sending the probe for repairs".

7-2. Preparing the probe for moving

Store in the storage case after performing the procedure in section 5 “Cleaning, disinfection and sterilization".

7-3. Packing for transportation

Store in the storage case after performing the procedure in section 5 “Cleaning, disinfection and sterilization" and then put the storage case in a cardboard box for additional protection.

7-4. Environmental conditions during transportation

Ambient temperature:	–10°C to 50°C 14°F to 122°F
Relative humidity:	10% to 90%
Atmospheric pressure:	700 hPa to 1060 hPa

⚠ Note
This probe is precision equipment and is vulnerable to physical impact. Protect it by packing it properly for transportation.
Contact one of our offices and/or distributor's offices listed on the back cover when transporting the probe.

8. Periodic Inspection

8-1. Safety tests of the probe

The safety tests should be conducted at least once a year by a qualified technician. The test record should be stored for future reference.

Remarks 1
Qualified technician: personnel for conducting safety tests of medical electrical equipment.
If the user requires an appropriate qualified technician, service personnel trained by us can conduct a test at the user's expense. Contact one of our office written on the back cover.

Remarks 2
Make a copy of the Safety Inspection Data Sheet provided in the instruction manual of the ultrasound diagnostic instrument. Use the sheet as a test record.

Procedure for periodic safety tests and judgment

(1) Test of patient leakage current from the patient connection to earth
Using the measuring instruments which usable to the requirement of IEC 60601-1:2005, conduct the test as shown in Fig. 15 of IEC 60601-1:2005.
Soak the insertion portion and handle in saline solution and measure the leakage current between the applied part and earth.
Do not soak probes in saline solution beyond the "IPX7 range" provided in section 2-2.

(2) Test of patient leakage current caused by an external voltage on the patient connection of an F-type applied part.
Using the measuring instruments which usable to the requirement of IEC 60601-1:2005, conduct the test as shown in Fig. 16 of IEC 60601-1:2005.
Soak the insertion portion and handle in saline solution and measure the leakage current between the applied part and earth.
Do not soak probes in saline solution beyond the "IPX7 range" provided in section 2-2.

Item	Normal condition	Single fault condition
(1) Patient leakage current from the patient connection to earth DC AC	 10 μA or less 100 μA or less	 50 μA or less 500 μA or less
(2) Patient leakage current caused by an external voltage on the patient connection of an F-type applied part		5000 μA or less

Table. Standard Values for Periodic Safety tests
(Extract from IEC 60601-1:2005)

⚠ Warning

Perform a safety tests at least once a year and keep a record of the inspection results.
Failure to notice an abnormal condition while using the probe can result in injury to the operator or patient. If an inspection finds an abnormal condition in the probe, immediately stop use and contact one of our offices and/or distributor's offices listed on the back cover.

8-2. Testing of measurement tolerances

Perform the measurements specified below using an ultrasonic phantom* at least once per year. The test record should be stored for future reference.

- Sensitivity
- Resolution

Remarks
Make a copy of the Measurement accuracy inspection data sheet provided in the instruction manual for the ultrasound diagnostic instrument. Use the sheet as a test record.

* The ultrasonic phantom is made of a substance which is similar to human tissue in terms of its response to ultrasonic waves.
Regions with different textures and targets spaced at preset intervals are embedded in the phantom. Some phantoms contain a mechanism for Doppler measurement. The phantom is used to check the performance of the probe and ultrasound diagnostic instrument, as well as to adjust the image settings.

8-2-1. Conducting tests

Some types of ultrasonic phantoms have targets with narrow gaps between them for confirming the resolution.
This enables to check the level of detail that images can be viewed on the display. For phantoms with no targets, the resolution determines the fineness of the displayed textures. The sensitivity can be determined by examining the luminance of ultrasonic images. Other factors that affect the resolution include the type of connected probe, gain, focus and recording instrument. The specific testing conditions must be recorded in detail to enable proper comparison at the next inspection.

8-2-2. Result judgment

Compare the currently-obtained value with the value recorded at the last test. If there is a significant difference between the two values, the current value is considered to be abnormal.
It is important to note that the resolution varies depending on the type of ultrasonic phantom and phantoms generally deteriorate over time.

⚠ Caution

Do not use a probe or ultrasound diagnostic instrument where a problem has been found.
This can result in an incorrect diagnosis. Contact one of our offices and/or distributor's offices listed on the back cover.

9. Configuration

9-1. Standard configuration

Probe	UST-5419	1 set
Storage case	CB-UST1-P1	1 set
Instruction manual	MN1-5793	1 copy

9-2. Options

Coupler attachment

EZU-PA3C1

Attaching of the coupler attachment EZU-PA3C1 makes a detecting of the blood flow in the shallow blood vessel, by keeping a suitable angle.

EZU-PA3C1H

Attaching of the coupler attachment EZU-PA3C1H makes a biopsy through the needle guide besides the function of the EZU-PA3C1.

EZU-PA3C2

Attaching of the coupler attachment EZU-PA3C2 makes a better images for shallow parts.

10. Disposal of the Device

Recycle or dispose this equipment properly in compliance with the Waste Management and Public Cleansing Law.

⚠ Caution
Before disposing the equipment, disinfect or take other infection-prevention measures. Disposal of the equipment without taking the proper preventative measures can lead to infection.

Waste Electrical and Electronic Equipment (WEEE) Directive

The illustration on the right is required by the EU WEEE Directive to appear on all electrical and electronic equipment.
For proper disposal of this product in an EU nation, contact an EU office or agency and observe appropriate local and national regulations and laws.

■Manufacturer

Hitachi, Ltd.

2-16-1, Higashi-Ueno, Taito-ku, Tokyo, 110-0015, Japan

■Contact

+81-3-6284-3668

http://www.hitachi.com/businesses/healthcare/index.html

Overseas Offices:

EC REP

Hitachi Medical Systems GmbH

Otto-von-Guericke-Ring 3 D-65205 Wiesbaden, Germany

EU Importer: Hitachi Medical Systems Europe Holding AG

Address: Sumpfstrasse 13 CH-6300 Zug, Switzerland

Distributor